Software Design and Analysis - CS3004
Deliverable 04

CodeArena Competitive Programming Platform

Deliverable 04

Group Members:

Abdul Kabeer (24I-0802)
Zeeshan Azeem (24I-0588)
Sharjeel Ali Khan (24I-0632)

Section:

BCS-4C

Instructor:

Dr. Afia Zafar

DOMAIN MODEL

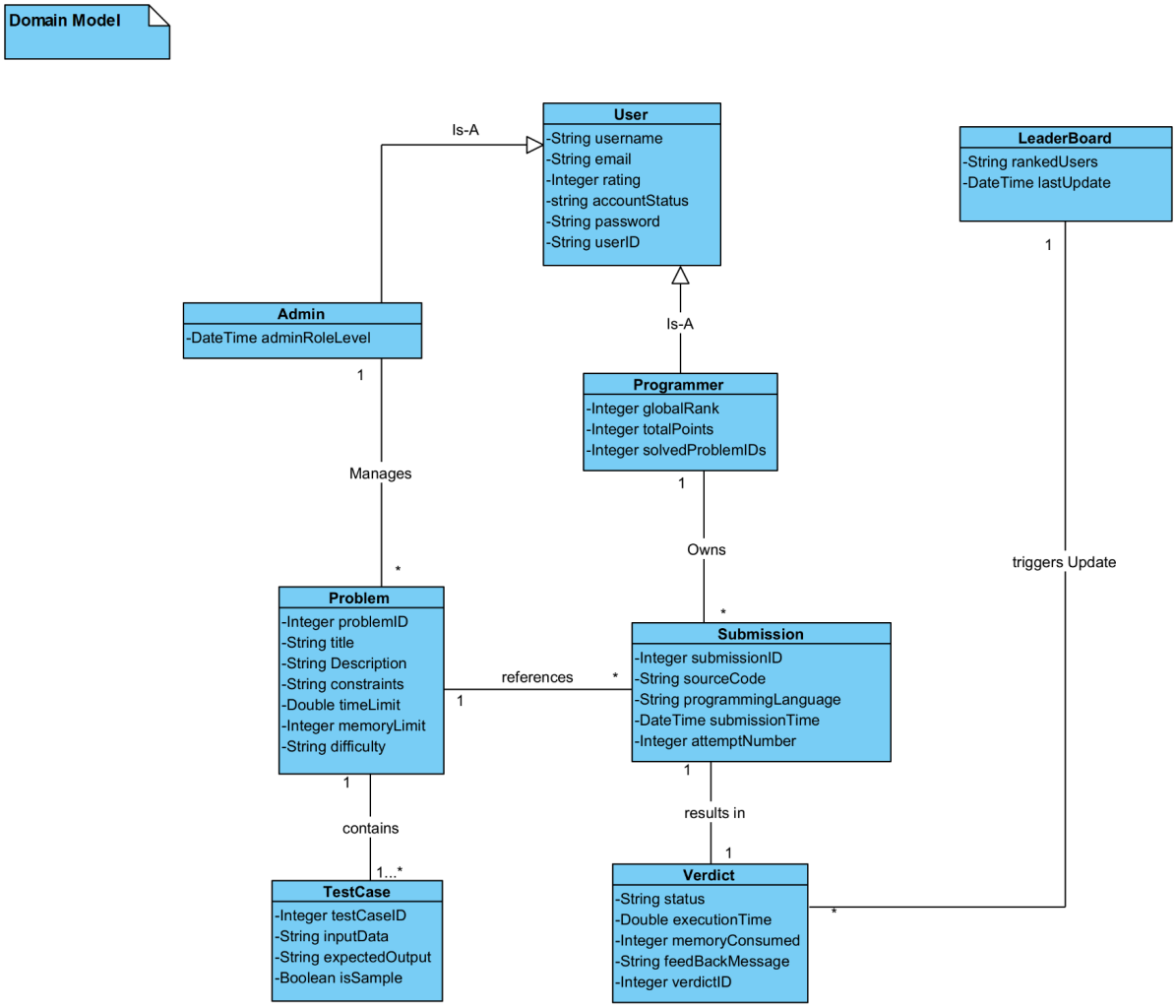

SSDs of 12 Use Cases

Create Problems

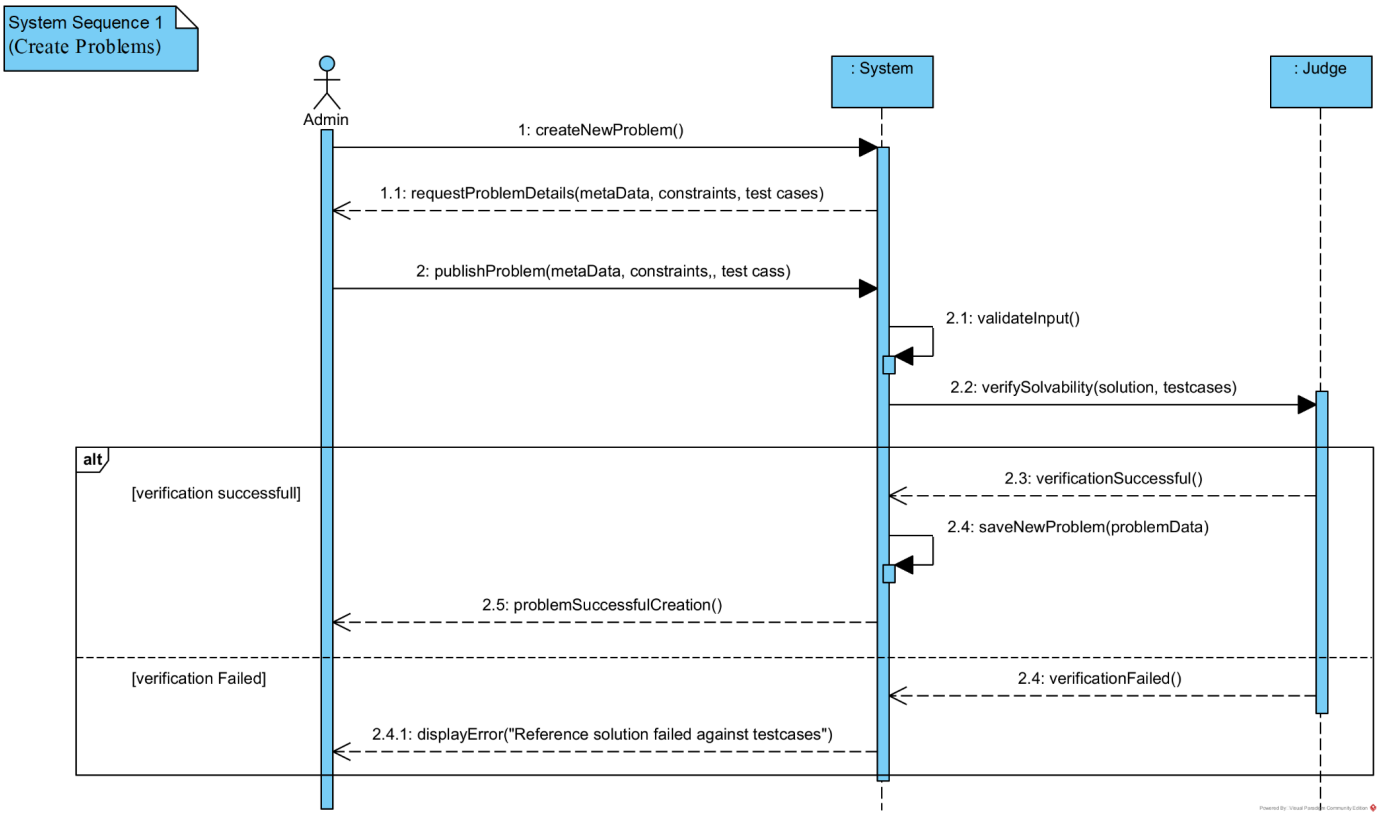

Manage Users

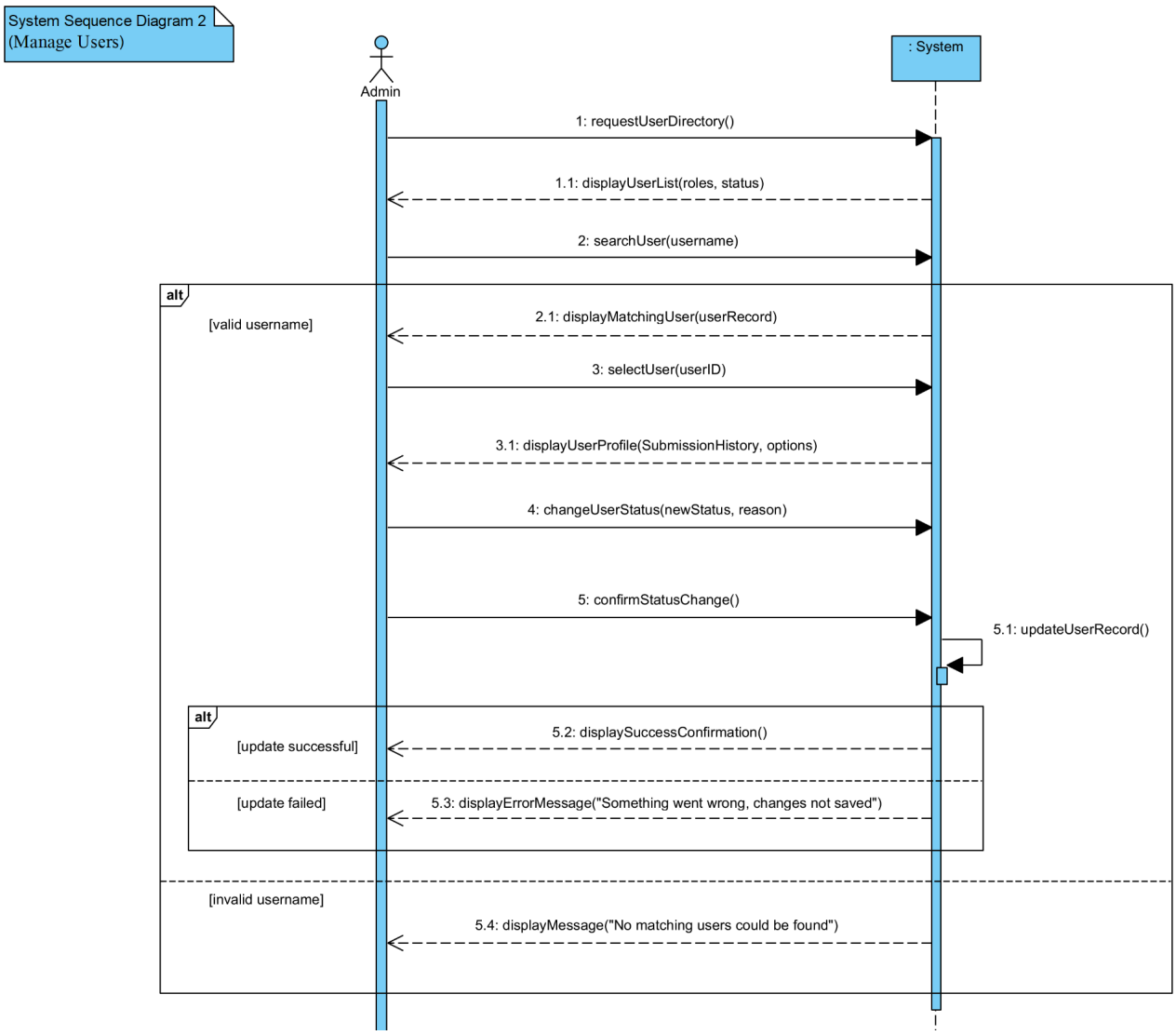

View System Analytics

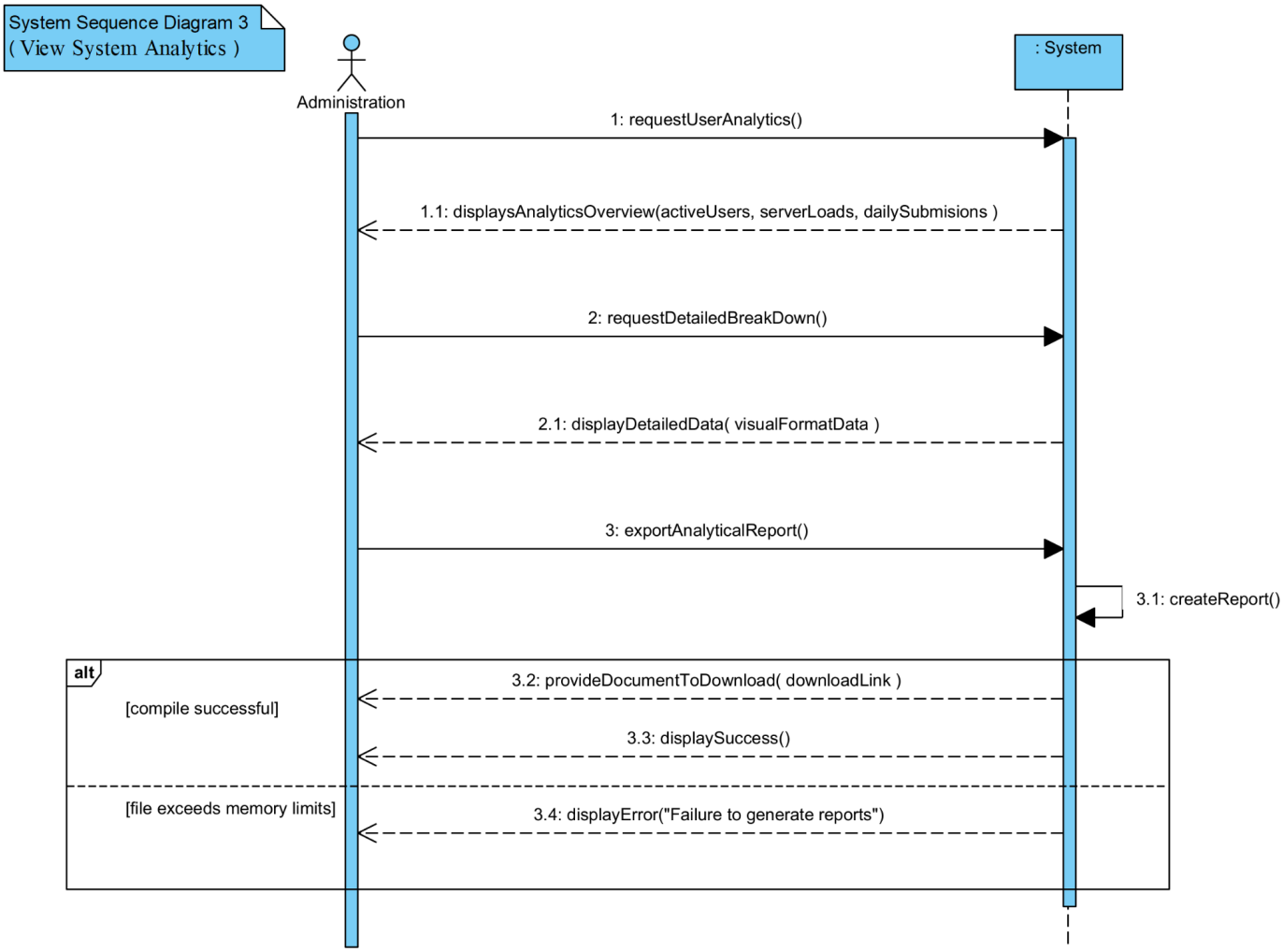

Browse System Catalog

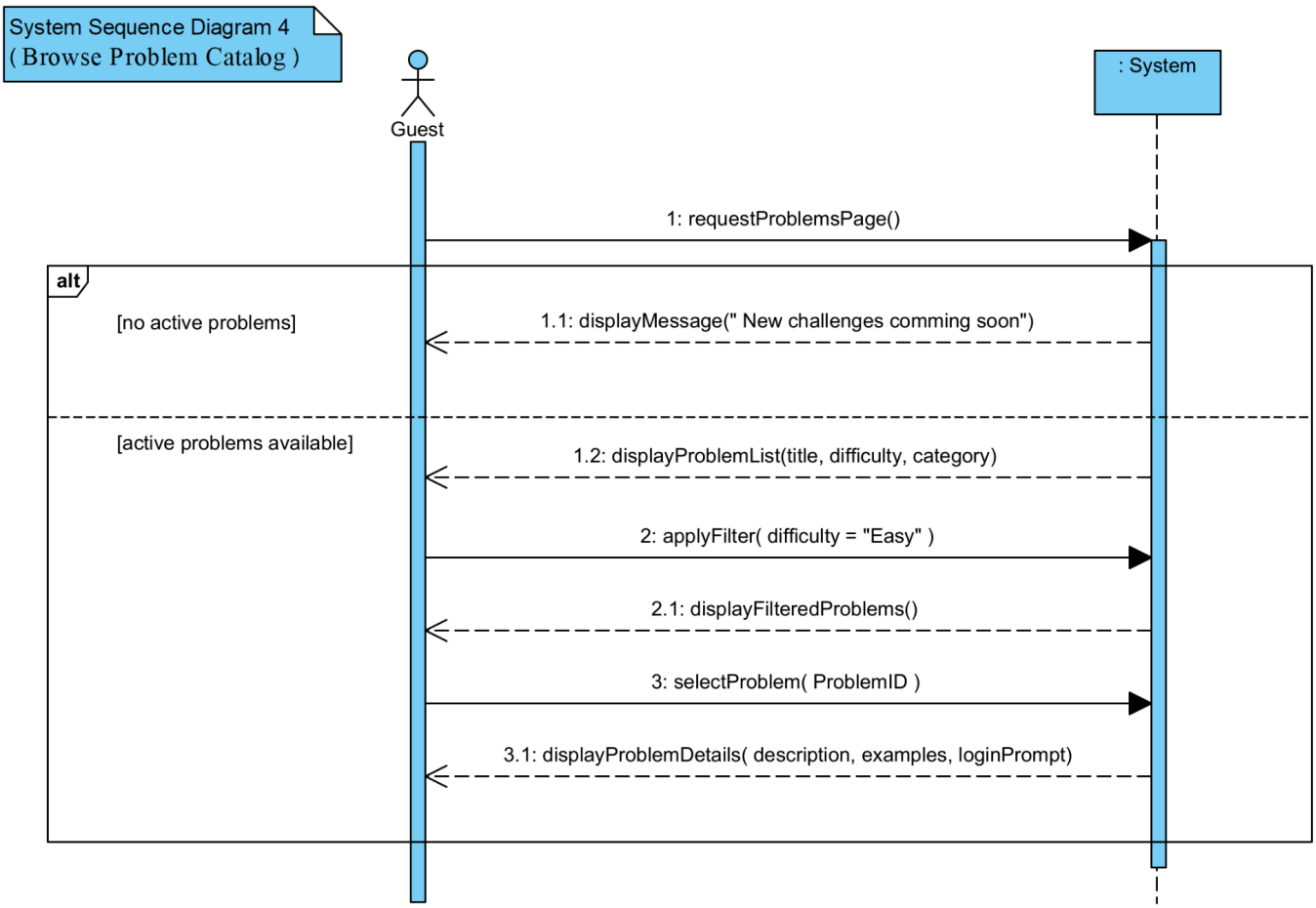

Compile Code

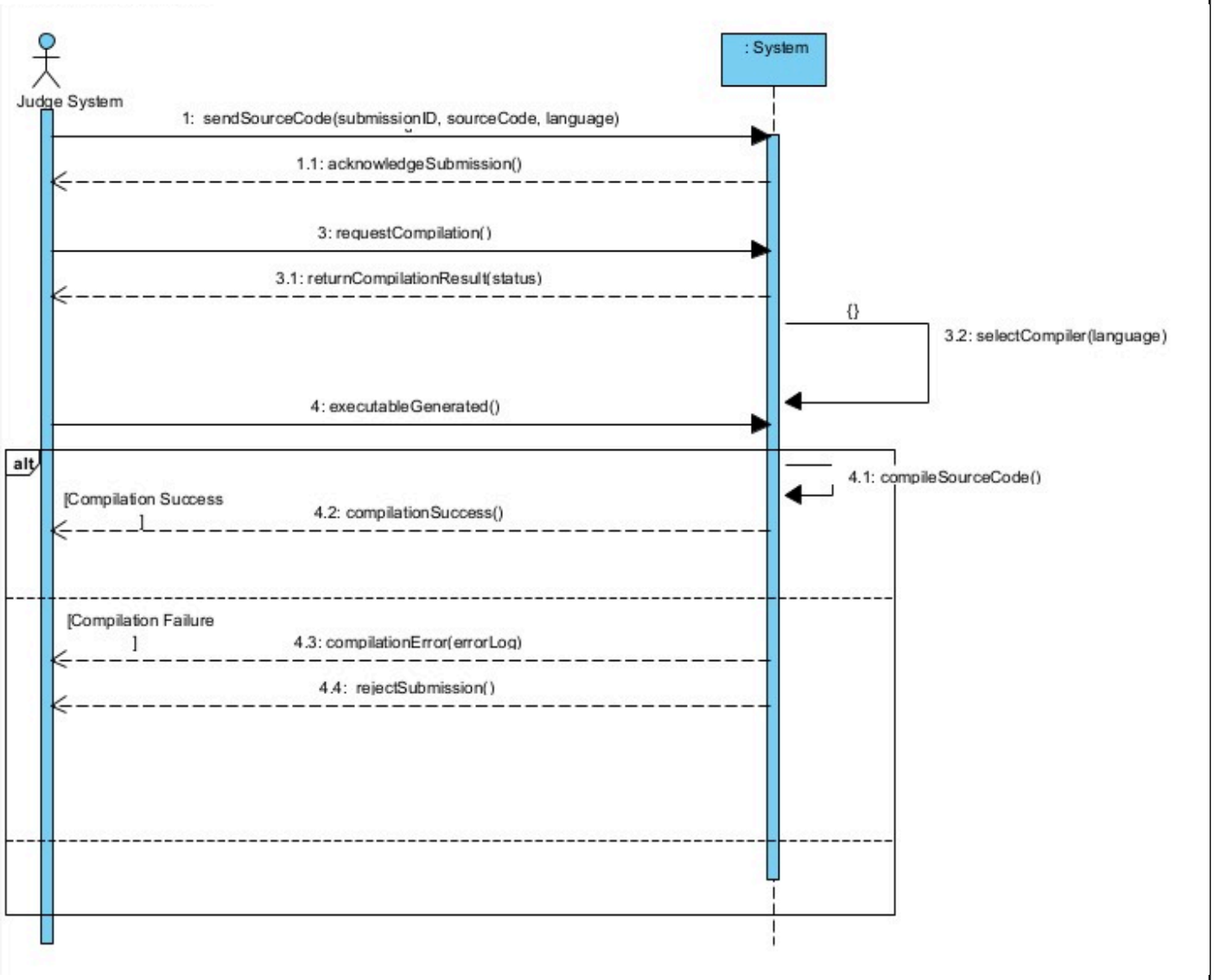

Execute Test Cases

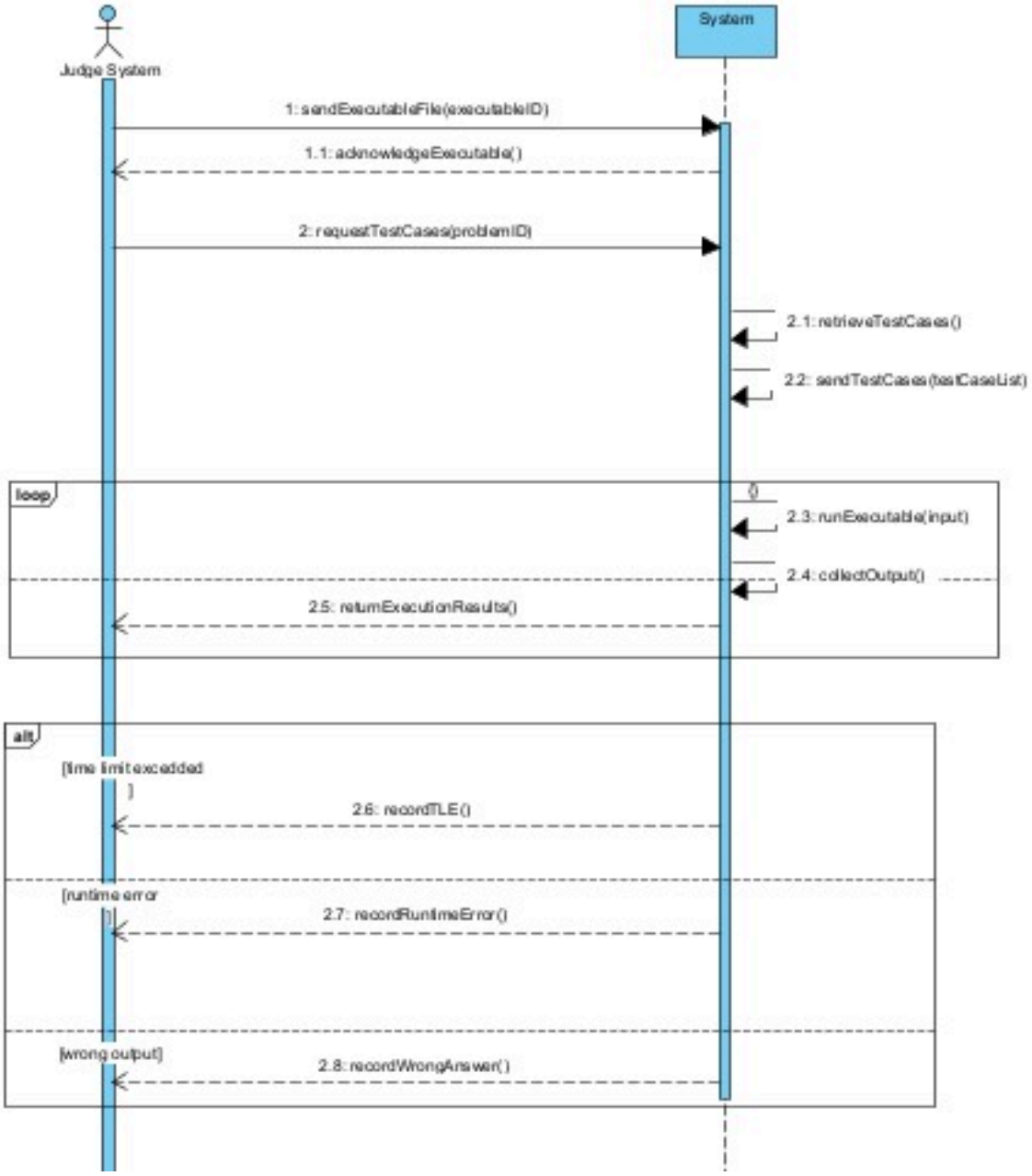

Return Verdict

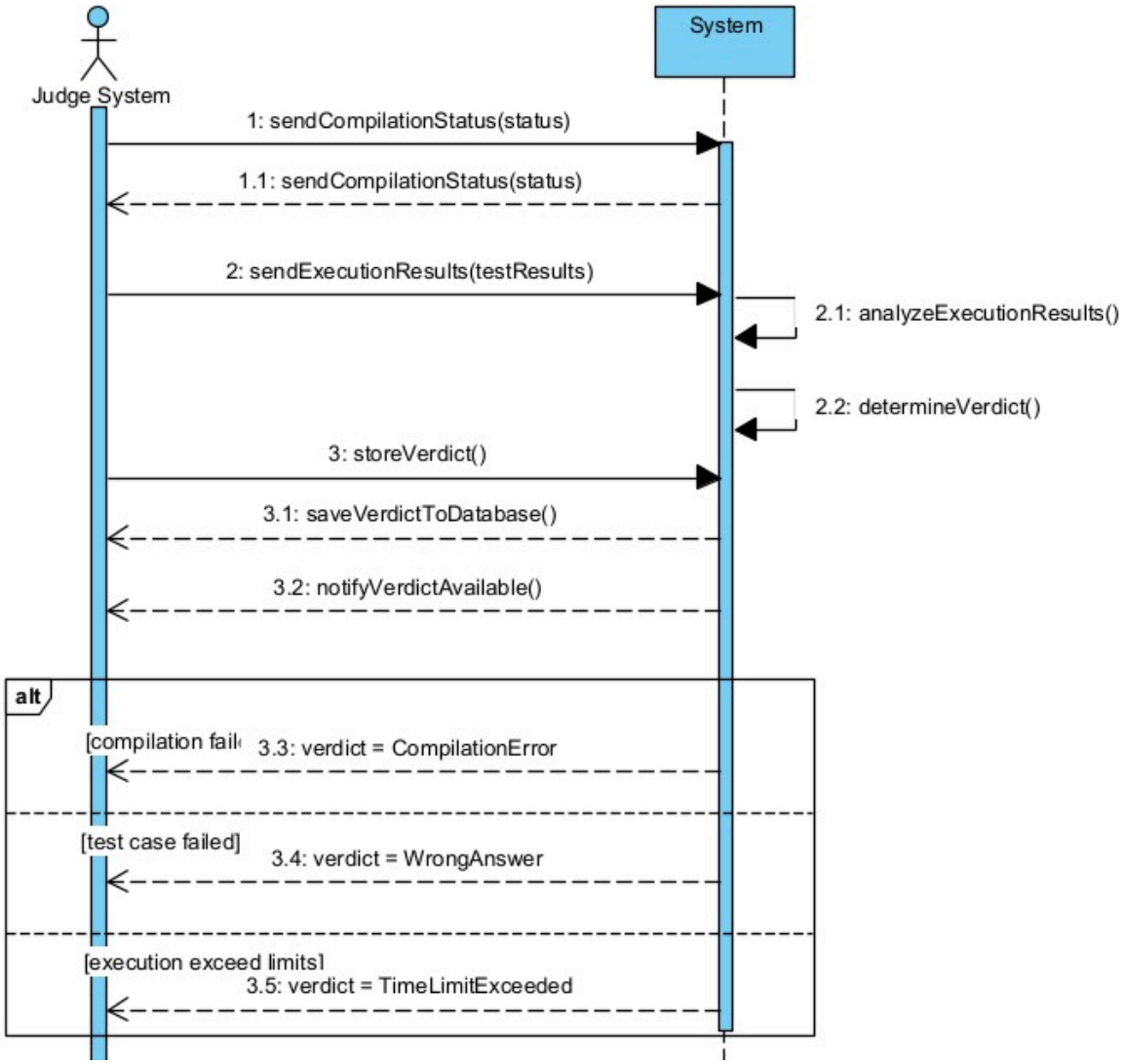

Manage Profile

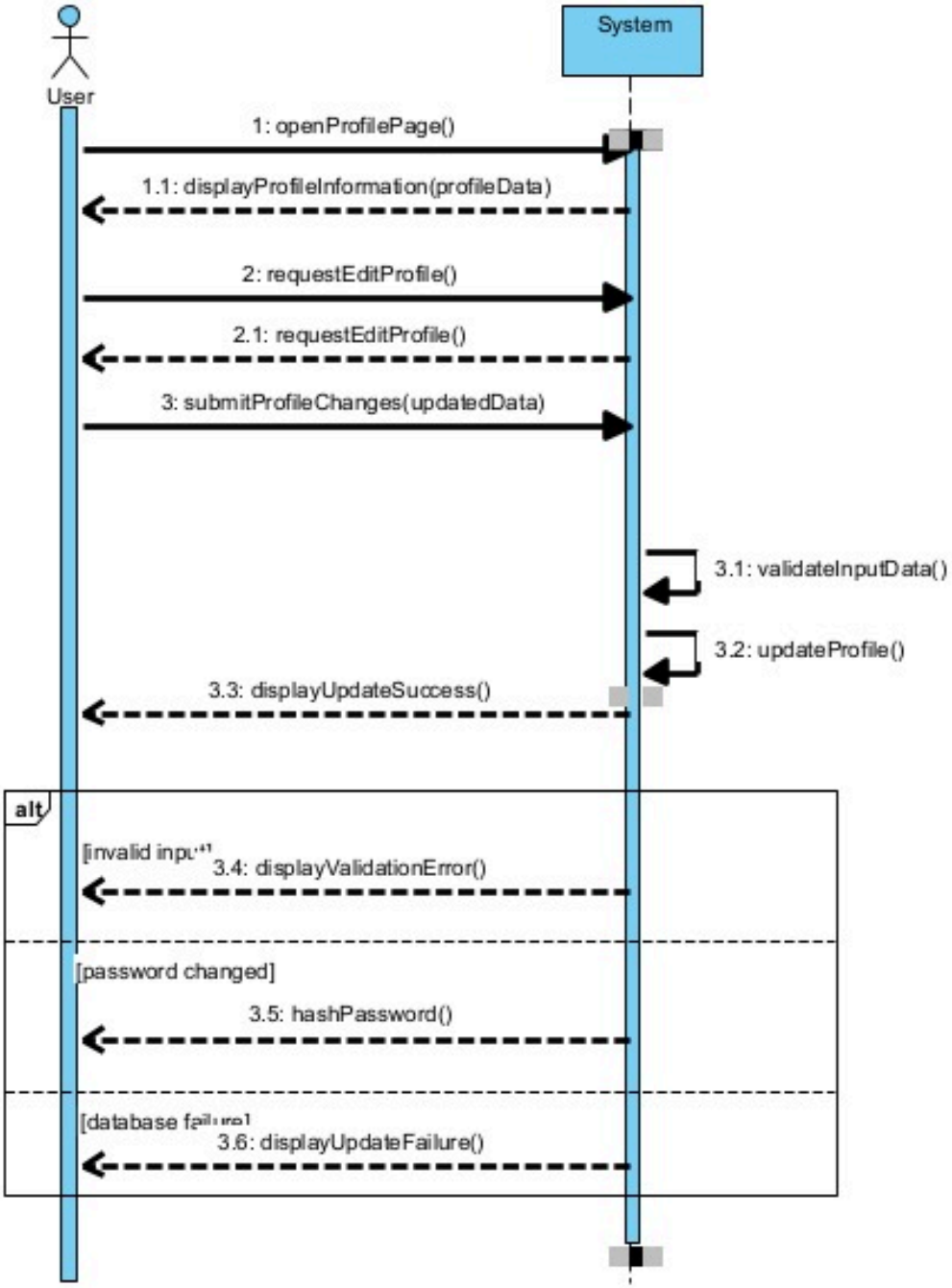

Register Account

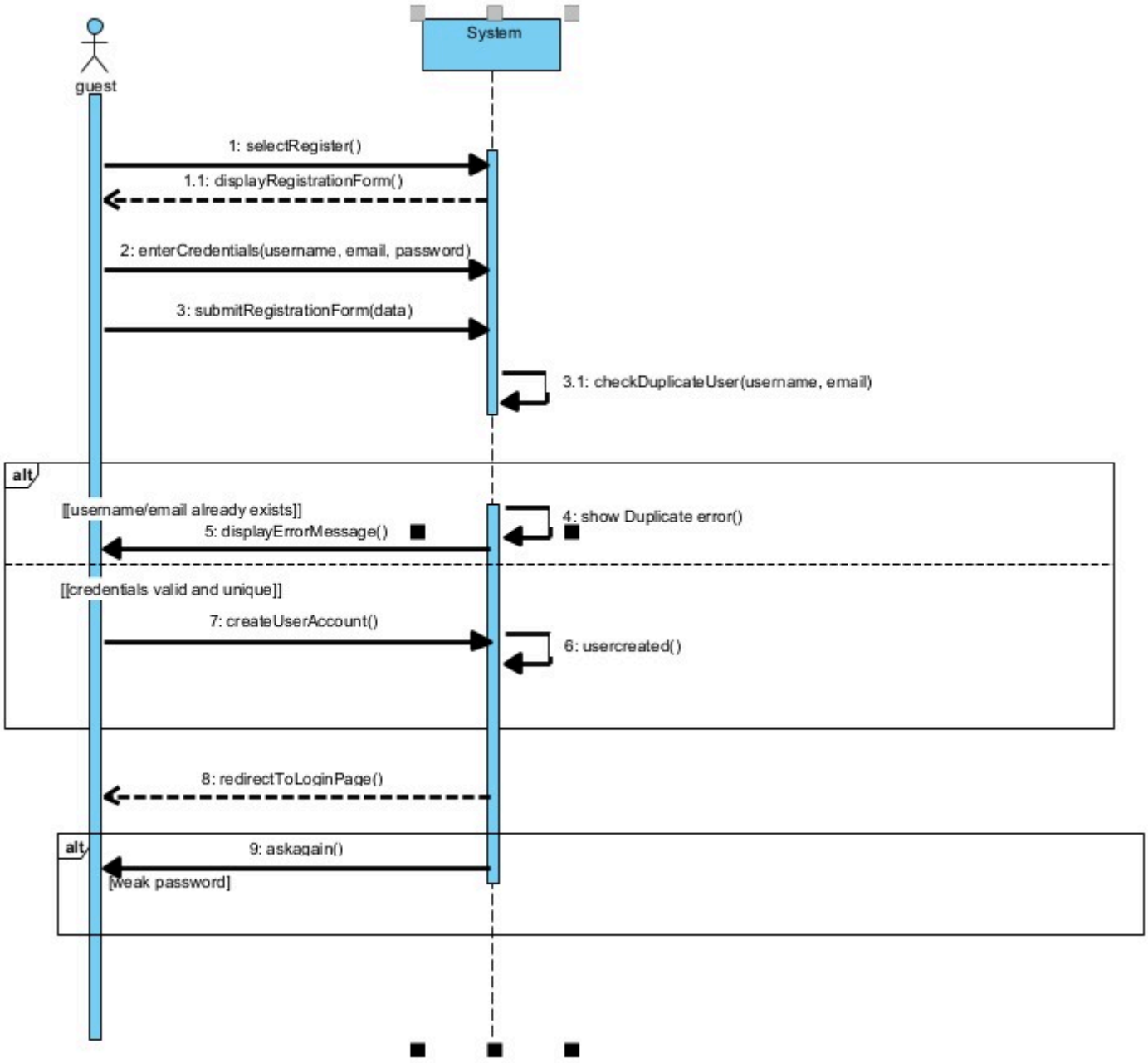

View Public Leaderboard

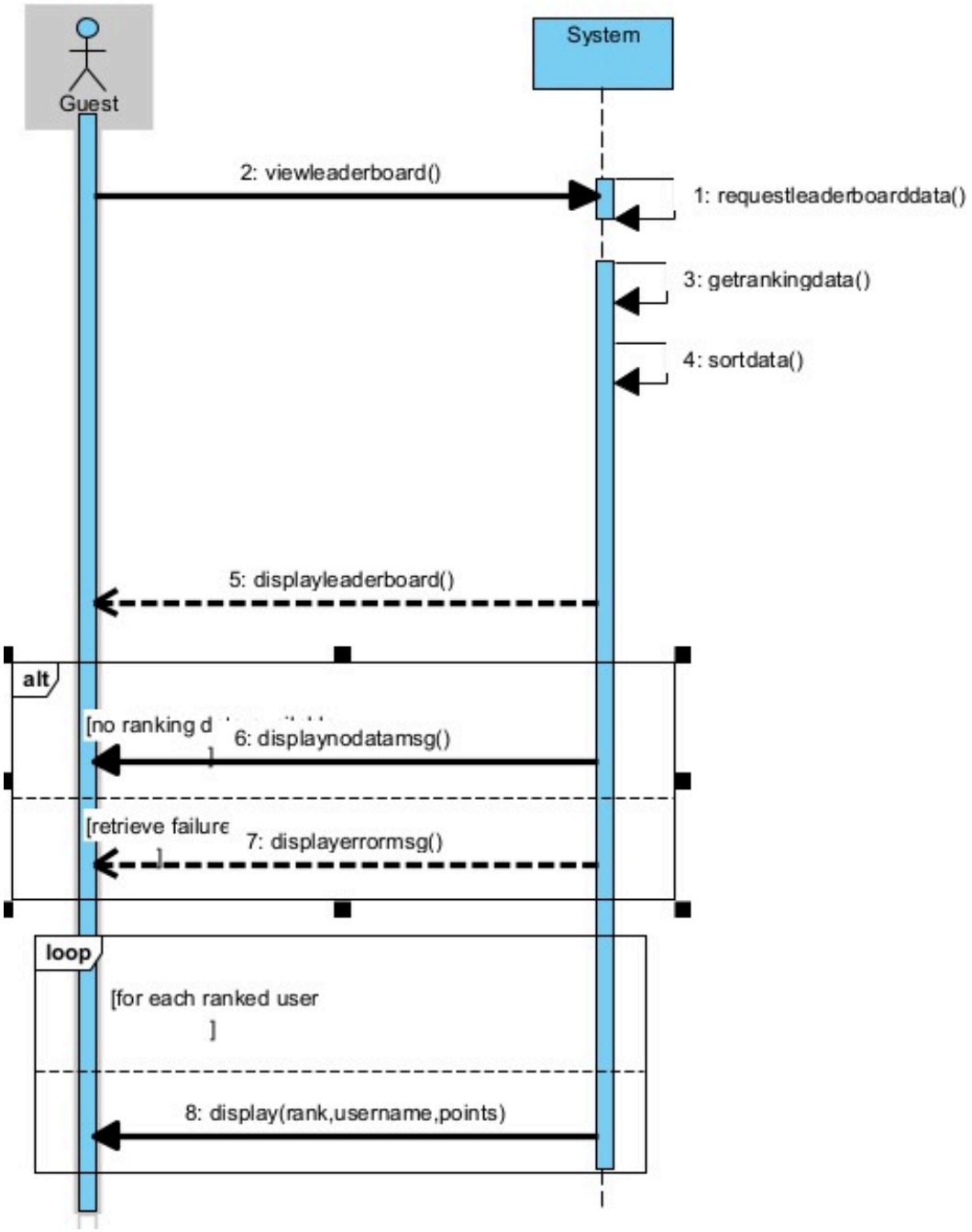

Login

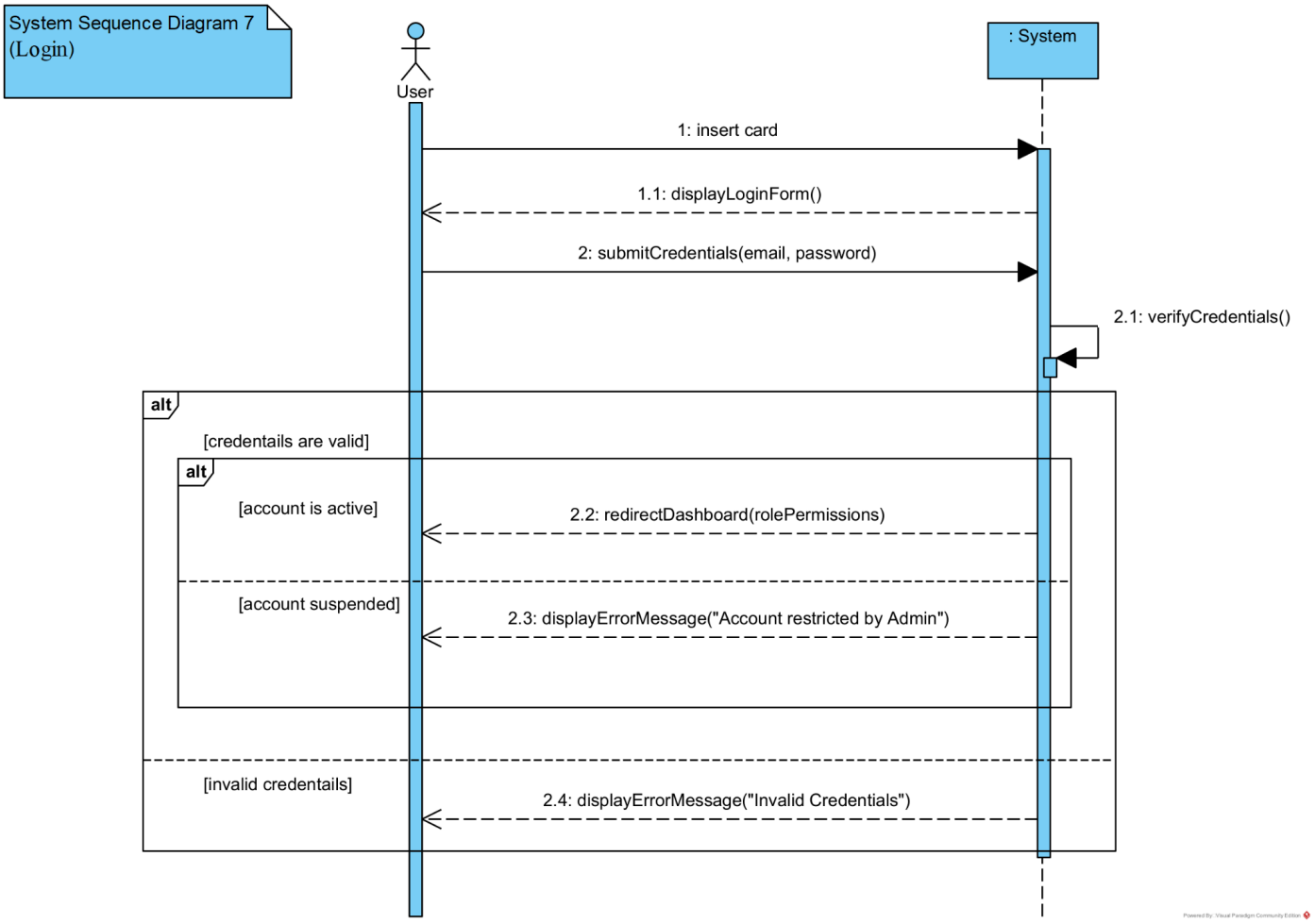
System Sequence Diagram 7
(Login)
User
: System
1: insert card
1.1: displayLoginForm()
2: submitCredentials(email, password)
2.1: verifyCredentials()
alt
[credentails are valid]
alt
[account is active]
2.2: redirectDashboard(rolePermissions)
[account suspended]
2.3: displayErrorMessage("Account restricted by Admin")
[invalid credentails]
2.4: displayErrorMessage("Invalid Credentials")
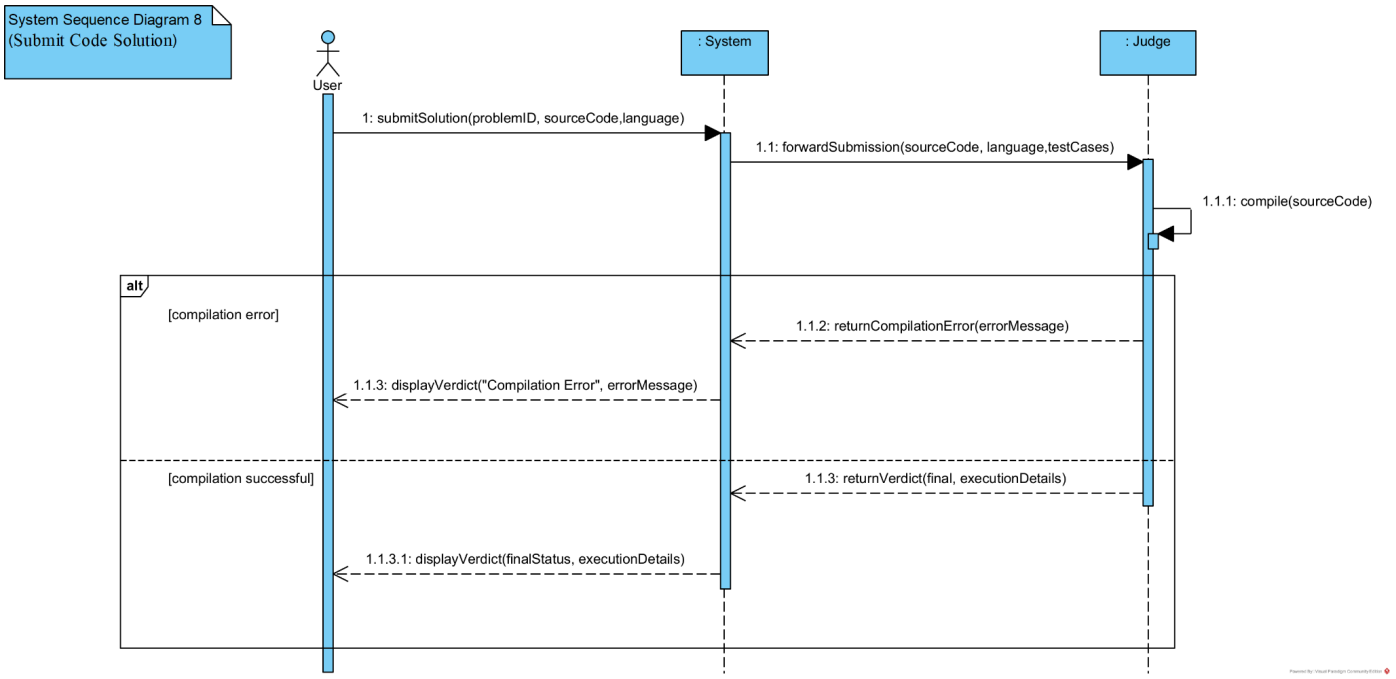
Submit Code Solution